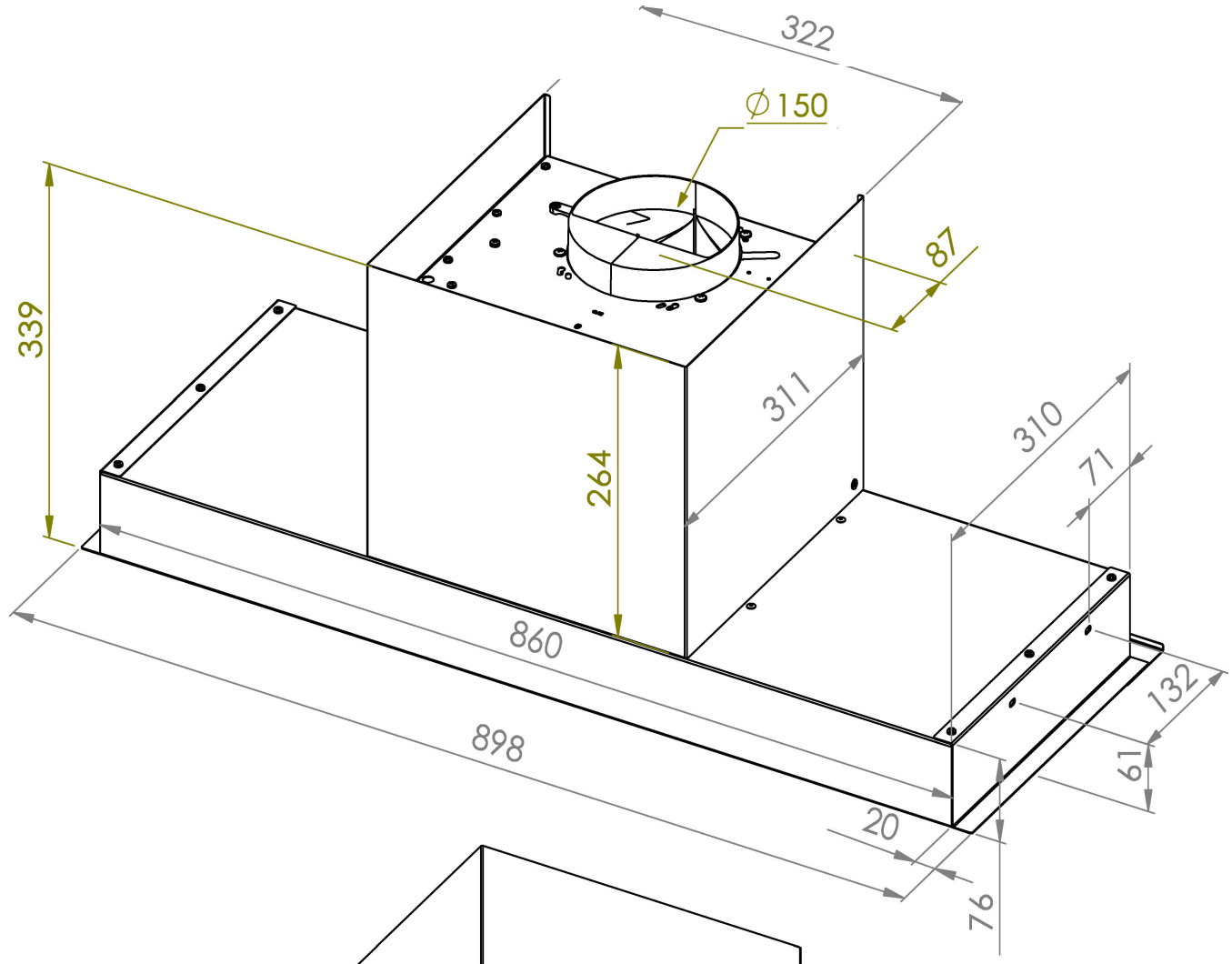

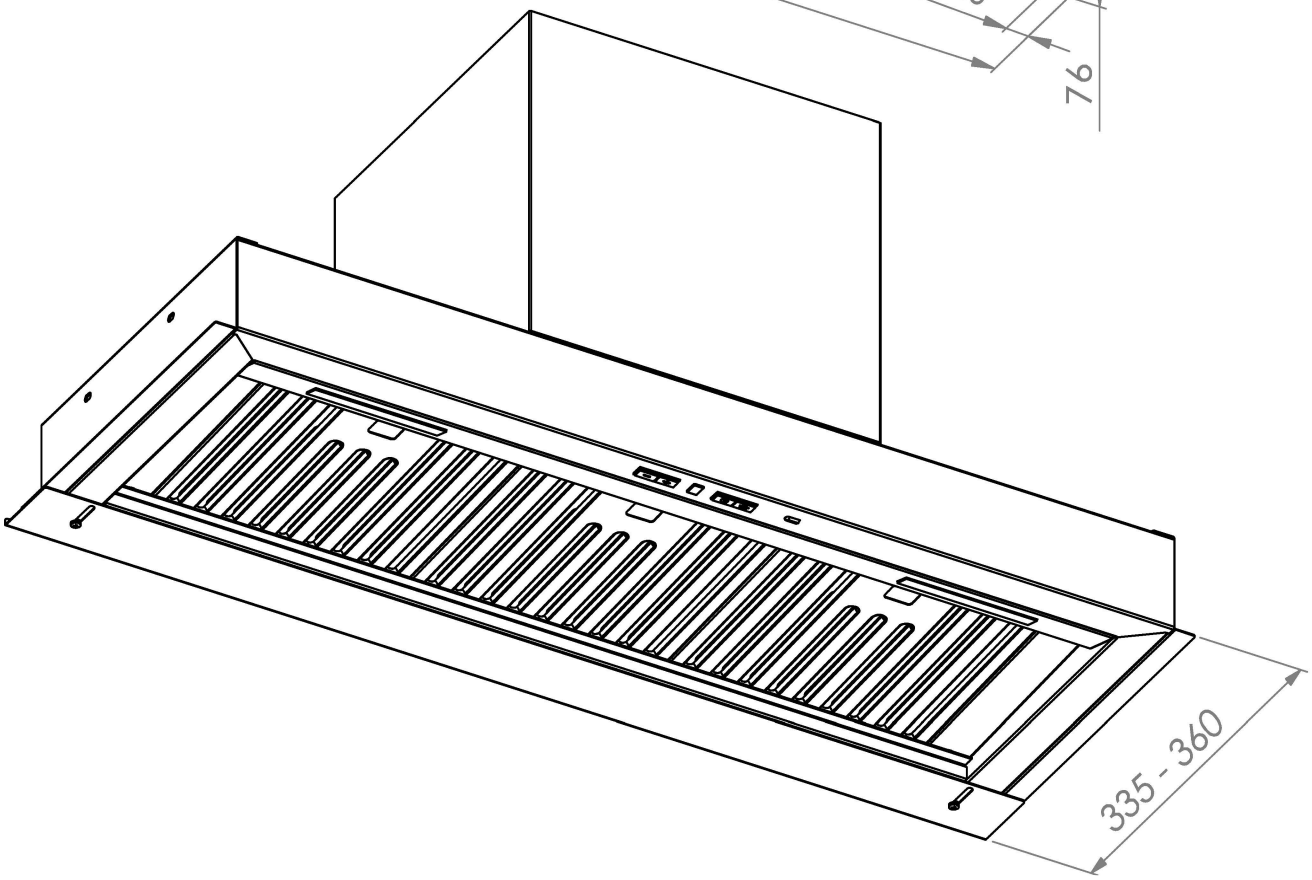

LUXAIR™
EXTRACTION WITH ATTRACTION